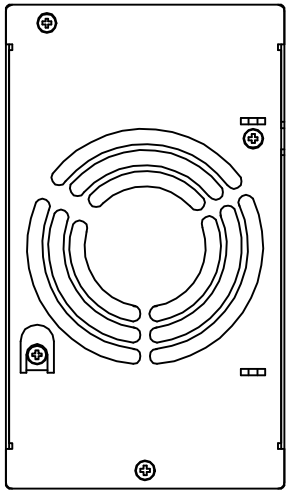

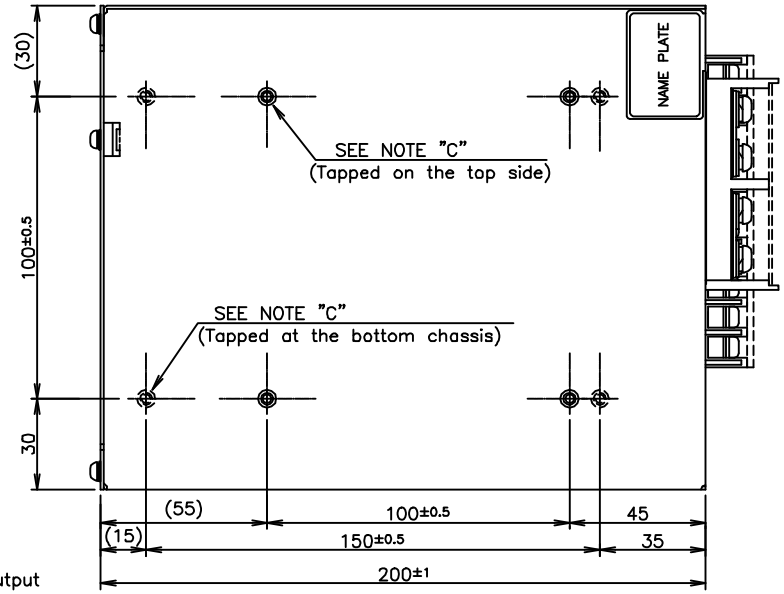

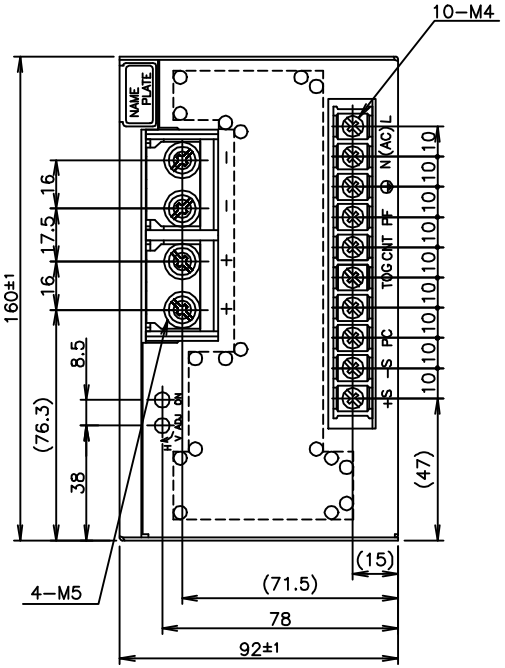

NOTES

A: Model name, nominal output voltage and maximum output current are shown here in accordance with the specifications.

B: Country of manufacture will be shown here.

C: M4 tapped holes (16) for customer chassis mounting. (Screws must not protrude into power supply by more than 6m/m .)

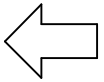

AIR FLOW

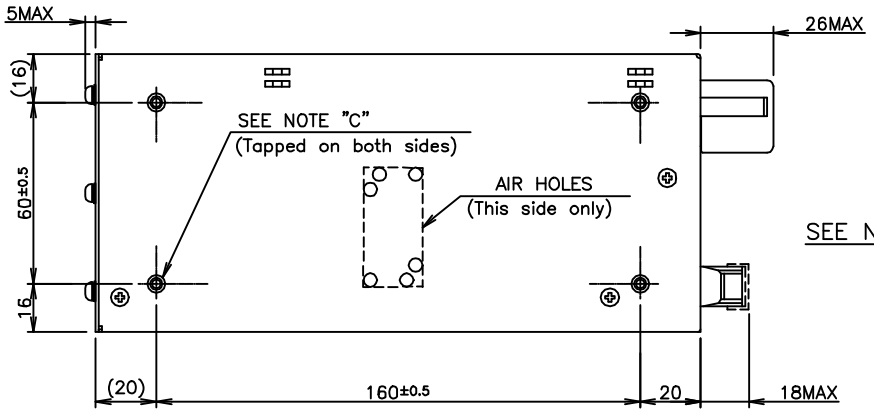

DETAIL OF NAME PLATE

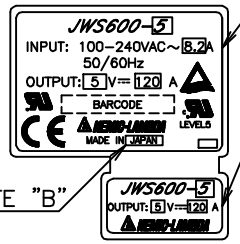

SEE NOTE "A"

SEE NOTE "A"

SEE NOTE "B"

ACCESSORIES

* Cover for barrier terminal strip ------- 2
  (Mounted on terminal strip at time of shipment)
* Metal piece for shorting TOG & CNT ---- 1
  (Mounted on terminal strip at time of shipment)
* Sensing wire ------- 2
  (BROWN: + , BLUE: −)

(unit : mm)

MODEL NAME	JWS600
NEMIC-LAMBDA	

A162-02-01-A